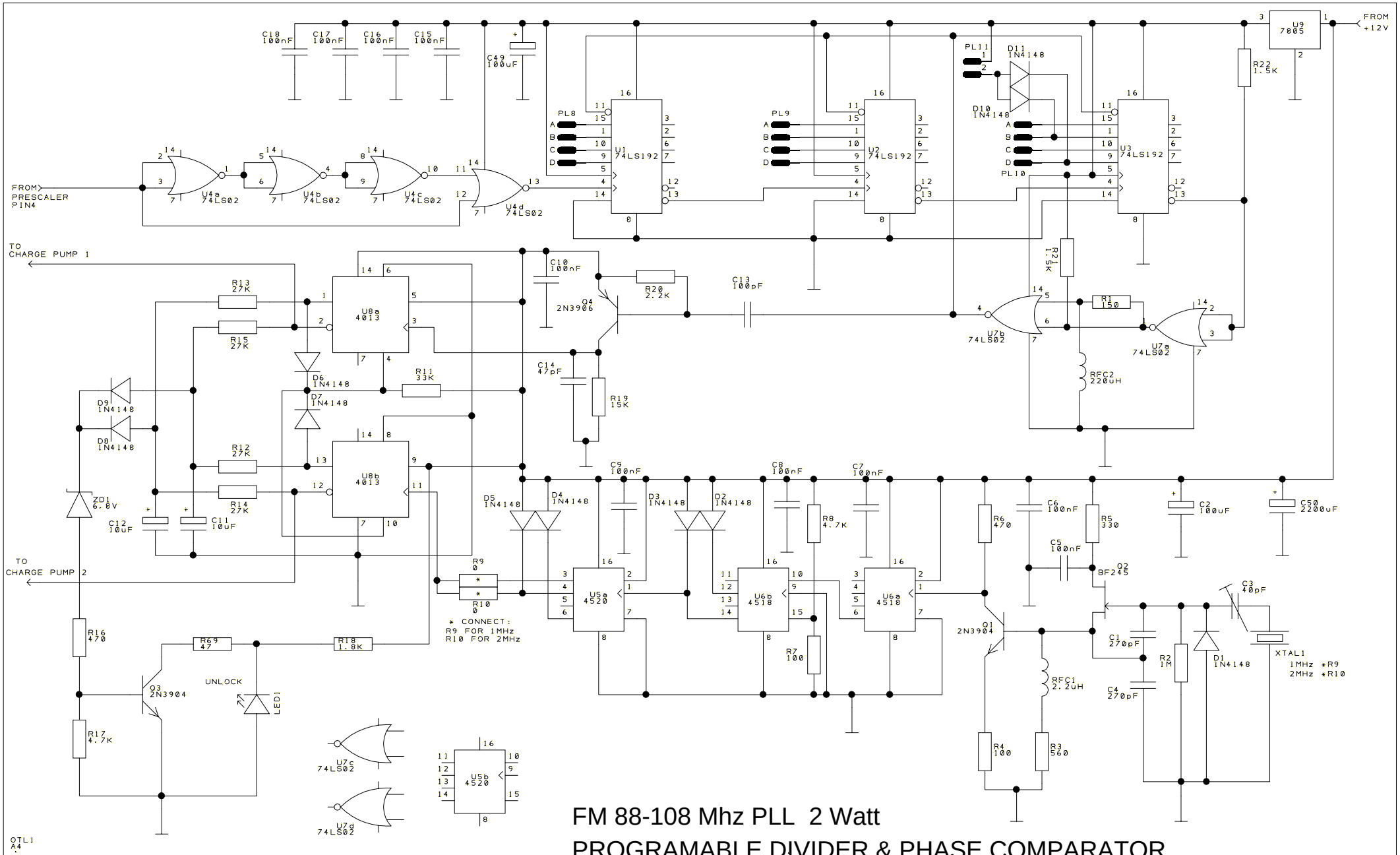

FM 88-108 Mhz PLL 2 Watt

PROGRAMABLE DIVIDER & PHASE COMPARATOR

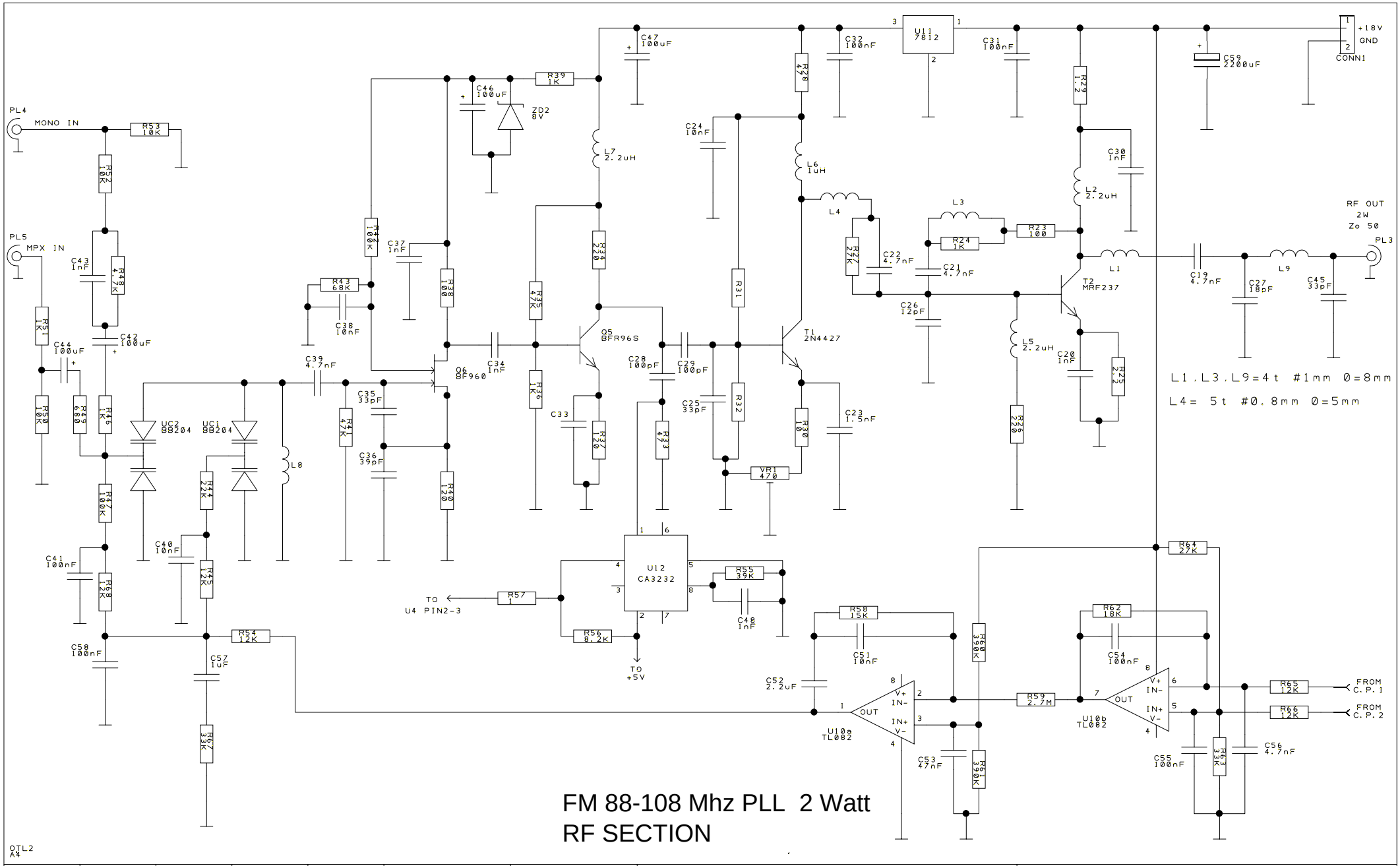
PL4
MONO IN
PL5
MPX IN
R53 10K
R52 10K
R48 4.7K
R51 1K
R50 10K
R49 680
R46 1K
R47 100K
R68 12K
C43 1nF
C42 100uF
C44 100uF
C41 100nF
C58 100nF
UC2 BB204
UC1 BB204
R44 22K
R45 12K
C40 10nF
R54 12K
C57 1uF
R67 33K
L8
C39 4.7nF
R41 47K
C35 33pF
C36 39pF
R42 100K
C37 1nF
R43 68K
C38 10nF
R38 100
R40 120
Q6 BF960
C34 1nF
R39 1K
C46 100uF
ZD2 8V
C47 100uF
L7 2.2uH
R34 220
R35 47K
R36 1K
Q5 BFR96S
C33
R37 120
C28 100pF
C29 100pF
R33 47
C25 33pF
C24 10nF
R31
R32
VR1 470
R30 10
T1 2N4427
C23 1.5nF
R28 47
L6 1uH
L4
R27 27K
C22 4.7nF
C21 4.7nF
C26 12pF
L3
R24 1K
R23 100
U11 7812
C32 100nF
C31 100nF
R29 1.2
C30 1nF
L2 2.2uH
L1
T2 MRF237
L5 2.2uH
C20 1nF
R25 2.2
R26 220
C59 2200uF
+18V
GND
CONN1
RF OUT
2W
Zo 50
PL3
C19 4.7nF
C27 18pF
L9
C45 33pF
L1,L3,L9=4t #1mm Ø=8mm
L4= 5t #0.8mm Ø=5mm
U12 CA3232
R55 39K
C48 1nF
R57 1
TO U4 PIN2-3
R56 8.2K
TO +5V
R58 15K
C51 10nF
C52 2.2uF
U10a TL082
C53 47nF
R60 390K
R61 390K
R64 27K
R62 18K
C54 100nF
R59 2.7M
U10b TL082
C55 100nF
R63 33K
C56 4.7nF
R65 12K
R66 12K
FROM C.P.1
FROM C.P.2
FM 88-108 Mhz PLL 2 Watt
RF SECTION
OTL2
A4